ESSENCE - International Journal for Environmental Rehabilitation and Conservation

Volume VI: No. 2 2015 [116 – 121] [ISSN 0975 - 6272]

[www.essence-journal.com]

Metamaterial based antenna for 10.0 GHZ Frequency

Ghosh, Devankar; Kher, Sakshi and Kumar, Nitin

Received: October 13, 2015 | **Accepted**: November 23, 2015 | **Online**: December 31, 2015

Abstract

In this paper a Microstrip patch antenna (MPA) based on CRLH metamaterials with improved Gain is presented. The MPA consists of a microstrip gap and metal Via, which behaves as series capacitor and shunt inductor respectively. The metal Via leads to negative permittivity while microstrip gap leads to negative permeability, and the combination of these two leads to negative refractive index. In order to improve the gain, metallic walls are placed at a distance of "λg/4" from the patch which shows an improvement in the results as compared to the structure with no metallic walls. The antenna is designed at 10GHz frequency with maximum gain of 11.7dB.

For Correspondence:

Department of ECE, DIT University Dehradun

Introduction

It is essential to briefly describe metamaterial before introducing metamaterial based antennas. Metamaterials are composite materials that are purposely engineered to provide material properties that are not otherwise attainable with ordinary materials. It is important to know that the properties of the metamaterials are derived from their physical structure, not from their chemistry. Metamaterials were introduced by Veselago, 1967. The utilization of the unusual properties of the metamaterials in small antennas is tried here to get an efficient antenna. The advantage of using Metamaterial structures in patch antennas is that enhanced antenna properties can be obtained as well as size of the antenna can be reduced for convenience while maintaining a good radiation performance. For the proposed antenna a cylindrical via is used which is the main radiating element of the antenna.Metamaterial antennas open a way to overcome the restrictive efficiency bandwidth limitation for small antennas. Yet this approach is still far from being mature. The most recent progress in the development of metamaterial-based small antennas can be

classified in the following four categories (Dong and Itoh, 2012).

1) CRLH-based or dispersion engineered resonant antennas. This includes the antennas with negative-order modes and zeroth-order resonators. There are a variety of antennas in this type that have been developed based on the engineered dispersion curves (k–beta diagram) .
2) Miniature antennas based on the metamaterialloadings, such as the epsilon/mu-negative materials, high permeability shells and the magnetic photonic crystals (MPC).
3) Metaresonator antennas (Alici and Ozbay (2007), Dong *et al.*, 2012) particularly or the antennas based on the split-ring resonators (SRRs) and complementary split-ring resonators (CSRRs).
4) Antennas loaded with metasurfaces (Zhang, *et al.*, 2003 and Dong *et al.*, 2011) such as the electromagnetic band gap (EBG) mushroom structures or patch-type reactive impedance surface (RIS). They are able to miniaturize the antenna size, reduce the surface wave as well as to improve the radiation characteristics.

Theory

Veselago (1968) stated that although LH materials do not exist in nature, they can be artificially constructed. In particular, Veselago concluded that the realization of a LH Metamaterial will be possible with the discovery or construction of an isotropic negative μ material. When Veselago published his paper, materials with $\mu < 0$ were not known to exist. For 30 years, Veselago's paper and its theory was not investigated any further. Interest in Veselago's paper and LH materials begin to materialize when Professor Pendry at Imperial College demonstrated the first non-ferrite negative μ Metamaterial based on split ring resonators (SRRs) in 1998 Pendry's SRR was the cornerstone of the first bulk LH Metamaterial realization by a group at University of California, San Diego (UCSD) in 2000 . The UCSD's LH Metamaterial was based on combining a SRR (negative μ) with a metal wire (negative ε).

The SRR based LH Metamaterials only exhibit LH properties around the resonance of the SRR. Therefore realiazation of LH Metamaterials using SRRs are known as the resonant approach (Eleftheriades *et al.*, 2002). In terms of microwave engineering applications, the resonant approach towards LH Metamaterial is not practical for the following reasons :

- Bulky, not applicable to planar microwave circuits
- Narrow-band due to requirement of operation near SRR resonance
- Lossy due to requirement of operation near SRR resonance

To overcome the drawbacks of SRR based LH Metamaterials for microwave engineering applications researchers realized that backward wave transmission line can be used to realize non resonant LH Metamaterials. This transmission line approach towards LH Metamaterials is based on the dual configuration of a RH/conventional transmission line. As shown in the figure conventional

transmission lines are modelled as unit cells with series inductance (LR) and shunt capacitance (CR), while LH transmission lines are modelled as unit cells with series capacitance (CL) and shunt inductance (LL).

(a) (b)

(a) RH Transmission Line Unit Cell

(b) LH Transmission Line unit Cell

Fig 1: Transmission Line Circuit Model Unit Cell

The propagation constant for the RH and LH unit cell are given by equation (i) and (ii) respectively.

$$\beta RH = \omega\sqrt{CRLR} \quad \text{.....(i)}$$

$$\beta LH = \omega\sqrt{CLLL} \quad \text{.....(i)}$$

By plotting a ω-β diagram, commonly referred to as dispersion diagram, the group velocity (vg=dω/dβ) and phase velocity (vp=ω/β) of a material can be directly observed. The dispersion diagram for the unit cell are plotted in figure below.

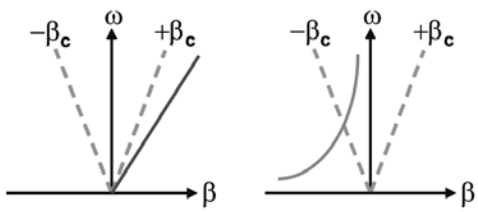

Fig 2: Dispersion Diagram of Unit Cell

The dispersion diagrams of Fig - 2 shows that vg and vp of the RH transmission line are parallel (vg.vp>0), while vg and vp for LH transmission line are antiparallel (vg.vp<0). Therefore an RH transmission line supports a forward wave, while an LH transmission line supports a backward wave. In addition, the LH transmission line's dispersion diagram shows that vg approaches infinity as frequency increases. However, this is not physically possible since it violates Einstein's special theory of relatively. This means that a pure LH transmission line is not possible. Instead, the unit-cell model has to be modified to account for unavoidable parasitic effects with any practical realization of a LH transmission line.

A pure LH transmission line (Eleftheriades *et al.*, 2002) cannot be physically realized due to RH parasitic effects. As a result, a LH transmission line is a more general model of a composite right/left-handed (CRLH) transmission line, which also includes RH attributes. The general model of a CRLH TL is shown in Fig 3 and consists of a series RH inductance LR, a series LH capacitance CL, a shunt RH capacitance CR , and a shunt inductance LL. A pure LH transmission line cannot be physically realized due to RH parasitic effects. The propagation constant for the CRLH unit-cell is given by

$$\beta CRLH = S(\omega)\sqrt{(\omega^2 * LR * CR) + \left(\frac{1}{\omega^2 * CL * LL}\right) - \left(\frac{LR}{LL} + \frac{CR}{CL}\right)}$$

$$\text{where } S(\omega) = -1, \quad \text{if} \quad \omega < \omega\Gamma 1 = \min\left(\frac{1}{LRCL}, \frac{1}{LLCR}\right)$$

$$S(\omega) = 1, \quad \text{if} \quad \omega > \omega\Gamma 2 = \max\left(\frac{1}{LRCL}, \frac{1}{LLCR}\right)$$

A CRLH unit cell is a combination of via (cylindrical metal generally perfect electric conductor) and microstrip gaps whose behavior is equivalent to the combination of series capacitors and shunt inductors respectively. And is used to realize Metamaterial and this is called transmission line approach to realize Metamaterial.

Metamaterial using unit cell is called transmission line approach. The transmission line approach is made by shunt inductance and series capacitance. The via is used to shot the ground plane and the patch and behaves like a shunt inductor and the series capacitors can be obtained by the gaps created by the free plates or patches.

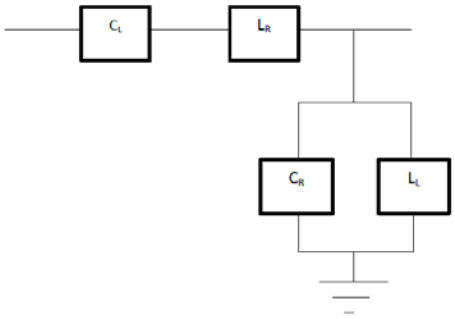

Fig 3: General Model of CRLH Transmission Line

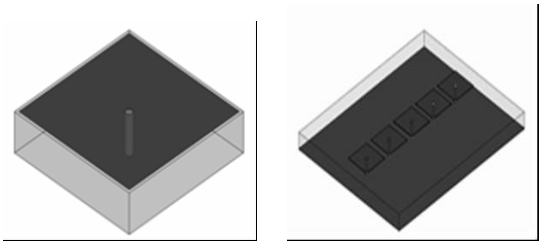

(a)Via in an Unit Cell (b) Cascaded Unit Cell

Fig 4: CRLH Unit Cell Structure

Design Of The Antenna

A single layer planar DNG (Ziolkowski, 2003) antenna photo etched on thin substrate [2] is designed. First we have taken a ground plane of height 0.017mm next a rectangular substrate (44mm×40mm×1.6mm) of duroid having permittivity 2.2 is developed. A circular patch having radius 8mm (Kwaha *et al.*, 2011) , width of 2mm and a circular gap having an outer radius of 6mm and inner radius of 5.8mm is printed on the substrate (Fig 5). A via of radius 0.2mm is insert edat the center point of the patch as shown in the Fig 6. For feeding we have used a microstripline of length 9.8mm, width 5mm and height of 0.017mm, by using the above dimensions a gap of 0.2 mm is found between the microstrip line and the patch. Metallic walls of thickness 1mm are placed at a distance of λg/4 from the patch as shown in the figure. Our antenna is simulated using Ansys HFSS-16. Directly, negative permittivity and permeability values can be entered using HFSS, based on finite element method.

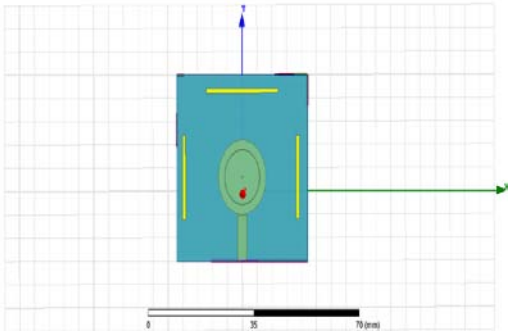

Fig - 5

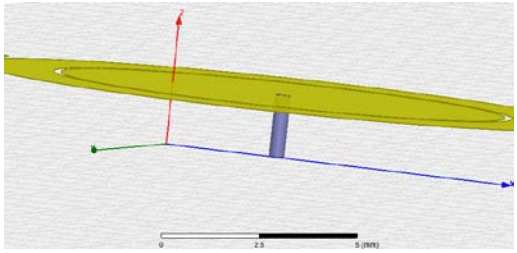

Fig - 6

Results

The frequency range of 8GHz to 12GHz is taken for the simulation of the antenna. From the 3D pattern it is shown that the gain for 10GHz frequency is 11.7dB as shown in Fig - 7. The S-parameter is in good agreement with the resonant frequency (Kwaha *et al.*, 2011) with optimization. The Fig 8 implies that the antenna radiates best at 5.24 GHz, where S(1,1)= -33.69dB. The graph also shows that the proposed antenna is a narrow band antenna. Fig 9 shows the 2D radiation patterns for our antenna with E and H field.

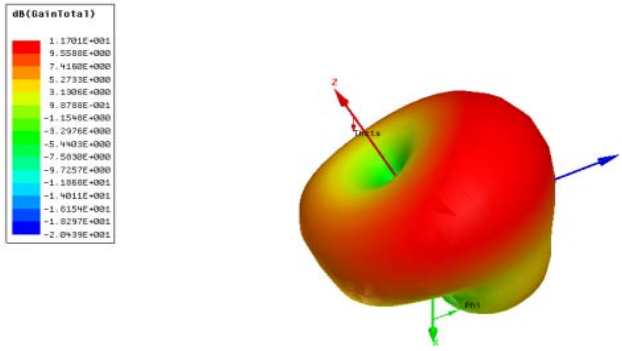

Fig 7

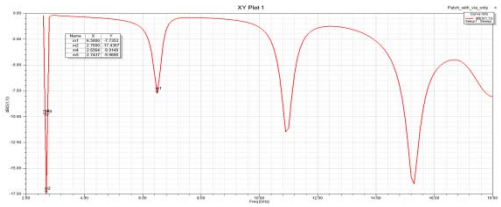

Fig - 8

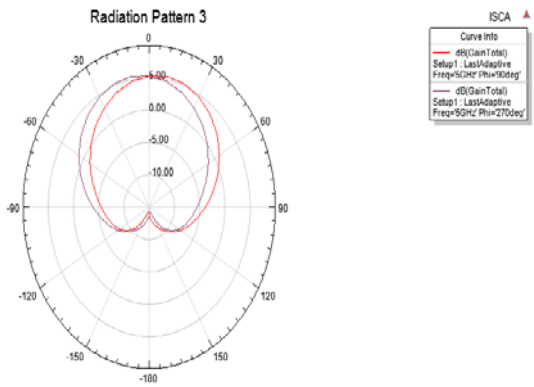

Fig - 9

Conclusion

In the paper (Kalia and Behera, 2011), the gain achieved by the antenna with one 'via' was 3.786dB at 5.0GHz frequency. In our proposed antenna structure, three additional metallic walls are placed at a distance of λg/4 from the circular patch with a 'via' at the center of the patch as shown in Fig 5.The simulation result shows an enhancement of the gain to 11.7dB at 10.0GHz frequency. Further, array can be developed to enhance the gain of the structure. Simulation results promises a gain of 10dB to 21.75dB. The beam width from Fig 9 can be obtained, which would come to be near about 60°.

References

Alici, K. B. and Ozbay, E. (2007): Electrically small split ring resonator antennas", J. Appl. Phys.,101: 083104-1–083104-4.

Dong, Y.; Toyao, H. and Itoh, T. (2011): Miniaturized zeroth order resonance antenna over a reactive impedance surface", Proc. Int. Workshop Antenna Technol. pp. 58–61.

Dong, Y.; Toyao, H. and Itoh, T. (2012): Design and characterization of miniaturized patch antennas loaded with complementary split-ring resonators, IEEE Trans. Antennas Propag. 60(2): 772–785.

Dong, Yuandan and Itoh, Tatsuo (2012): Metamaterial-Based Antennas, IEEE, IEEE. 100 (7).

Eleftheriades, G.V.; Iyer, A.K.; Kremer, P.C. (2002): Planar negative refractive index media using periodically L-C loaded transmission lines. IEEE Trans. Microwave Theory Tech., 50(12): 2702-2712.

Hany E. Abd El-Raouf; Sulaiman Syed Zaheer and Yahia M. M. Antar (2008): Design of small antennas based on DNG Metamaterials, IEEE international RF and Microwave conference, December 2-4.

Kalia, Jyotisankar and Behera, S. K. (2011): Compact High Radiation Metamaterial Antenna For Wireless Application International conference in electronic system (ICES-2011), NIT Rourkela.

Kwaha, B. J.; Inyang, O. N and Amalu, P. (2011): The circular microstrip patch antenna – design and implementation.

Veselago, V. G. (1968): The electrodynamics of substances with simultaneously negative values of μ and ε, Sov. Phys. Uspekhi, vol.10, no. 4, pps. 509-514.

Zhang, Y. ; Hagen, J. von; Younis, M.; Fischer, C. and Wiesbeck, W. (2003): Planar artificial magnetic conductors and patch antennas", IEEE Trans. Antennas Propag. 51(10): 2704–2712.

Ziolkowski, R.W. (2003): Design, fabrication, and testing of double negative metamaterials", IEEE Trans. on Antennas and Propagation, 51(7): 1516-1529.